Perkins 2206A-E13TAG2 diesel engine

Newage/Stamford HCI444E alternator

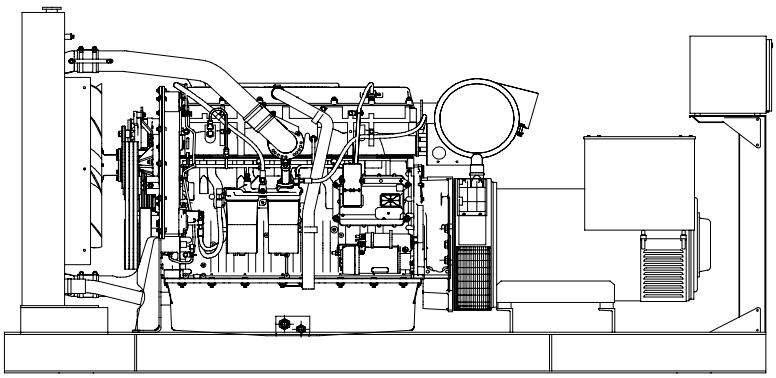

ISO 9001:2000

This generator is available with CE certification

Standard Generator Features

- AMF, Automatic mains failure unit
- Heavy duty type, 6 cylinder, water cooled engine
- 50°C tropical type radiator
- Starter motor
- Lead acid battery
- Charging alternator
- Battery charge redressor
- Heavy duty, brushless type alternator
- Base frame with anti-vibration units
- Industrial type silencers
- Flexible exhaust compensator
- Block water heater unit
- Control panel with digital-automatic main control module
- Fan, fan drive, charging alternator drive and all rotating parts covered
- Radiator matrix covered by metal mesh against the mechanical damages
- Fabricated and welded steel base frame
- Anti-vibration mountings
- Engine and alternator manufacturer test reports
- Factory load, performance and function tests

Optional Features

- Automatic load transfer panel
- Automatic syncronization and power sharing systems
- Soundproof canopy
- Container type enclosers
- Road trailer
- Job-site trailer
- Protection circuit breaker
- Air start
- Remote type radiator
- Base fuel tank
- External type fuel tank
- Automatic fuel transfer system
- Residential silencer

	Standby		Prime	
	kVA	kW	kVA	kW
	400	**320**	**350**	**280**

Perkins 2206A-E13TAG2 Engine

Standard Features

Economic power

- Mechanically operated unit fuel injectors with electronic control,combined with carefully matched turbocharging,give excellent fuel atomisation and combustion with optimum economy
- Low emissions result from electronic control of fuel injected.

Reliable power

- Developed and tested using the latest engineering techniques and finite element analysis for high reliability, low oil usage and low wear rates.
- High compression ratios ensure clean rapid starting in all conditions.
- Perkins global product support is designed to enhance the customer . experience of owning a Perkins powered machine.

Compact and efficient power

- Exceptional power to weight ratio and compact size gives optimum power for ease of installation and more cost effective transportation.
- Designed to provide excellent service access for ease of maintenance.

Standards

- UK MOD, BS5750, ISO9001, BS5514/1-1982, ISO 3046/1, ISO 8528/1

Model	Standby kW		Prime kW	
	Gross	Net	Gross	Net
2206A-E13TAG2	**368,4**	**348,9**	**324,2**	**305,3**

Lubricating System

Type	Pressurized
Cubic capacity, Liters	12,5
Lub oil pressure (min), bar	2

- Wet sump with filler and dipstick
- Full-flow replaceable 'Ecoplus' filter
- Oil cooler integral with filter header

Fuel System

Type of injection system	MEUI
Fuel injecter	MEUI
lift pump delivery, litres/hour	480
Governor type	Electronic, governing to ISO 8528-5 class G2

- Mechanically actuated electronically controlled unit fuel injectors with full authority electronic control
- Replaceable 'Ecoplus' fuel filter elements with primary filter/water separator
- Fuel cooler

Technical Specifications

Manufacturer	PERKINS	تولید کننده
Model	2206A-E13TAG2	مدل
Type	4 cycle, water-cooled, diesel engine	تیپ
Number of cylinders	6	تعداد سیلندرها
Cylinder arrangement	Vertical in-line	آرایش سیلندرها
Displacement, Liters	12.5	جا به جایی
Bore X Stroke, mm	130 X 157	قطر سیلندر x کورس پیستون
Compression Ratio	16.3:1	نسبت تراکم
Combustion System	Direct injection	سیستم احتراق
Aspiration	Turbocharged, air-to-air charge cooled	سیستم تنفس
Rotation	Anti-clockwise viewed on flywheel	چرخش
Gross engine power, kWb	368,4	قدرت ناخالص موتور
Exhaust gas flow (after turbo),	64,8 m³ / min	قدرت فن
BMEP gross, bar	19	
Combustion air flow,	23.6 m³ / min	جریان هوای احتراق
Exhaust gas temp.(after turbo),	630 °C	دمای گاز خروجی از اگزوز
		جریان هوای خروجی از اگزوز

Electrical System

Type	24 Volt negative earth
Starter motor (DC)	24 Volt
Starter motor power	7.8 kW

- ECM mounted on engine with wiring looms and sensors
- 3 level engine protection system

Fuel Consumption

liters per hour	%110 Load	80 L
	%100 Load	71 L
	%75 Load	54 L
	%50 Load	37 L
grams per kWh	%110 Load	195 g/kWh
	%100 Load	196 g/kWh
	%75 Load	198 g/kWh
	%50 Load	203 g/kWh

Cooling System

Type	Tropical, heavy duty type
Ambient temperature, °C	50
Cooling fan air flow, m³/min	654
Jacket coolant flow, Liters / sec	5.3

- Gear-driven circulating pump
- Mounted belt-driven pusher fan
- Radiator supplied loose incorporating air-to-air charge cooler
- System designed for ambients up to 50ºC

Optional Equipments

- Additional speed sensor
- Temperature and pressure sensors for gauges
- Air filter rain hood
- Twin starters/facility for second starter
- Electric hours counter

Newage/Stamford HCI444E Alternator

Standard Features

Winding&Electrical Performance

All generator stators are wound to 2/3 pitch.This eliminates triplen (3rd, 9th, 15th...) harmonics on the voltage waveform and is found to be the optimum design for trouble-free supply of non-linear loads.The 2/3 pitch design avoids excessive neutral currents sometimes seen with higher winding pitches, when in parallel with the mains.A fully connected damper winding reduces oscillations during paralelling.This winding, with the 2/3 pitch and carefully selected pole and tooth designs, ensures very low waveform distortion.

AS440 AVR

With this self-excited system the main stator provides power via the Automatic Voltage Regulator (AVR) to the exciter stator. The high efficiency semi-conductors of the AVR ensure positive build-up from initial low levels of residual voltage.

The exciter rotor output is fed to the main rotor through a three-phase full-wave bridge rectifier. The rectifier is protected by a surge suppressor against surges caused, for example, by short circuit or out-of-phase paralleling.

The SX440 will support a range of electronic accessories, including a 'droop' Current Transformer (CT) to permit parallel operation with other ac generators. If 3-phase sensing is required with the self-excited system, the SX421 AVR must be used.

Terminals&Terminal Box

Standard generators are 3-phase reconnectable with 12 ends brought out to the terminals, Which are mounted on a cover at the non-drive end of the generator. A sheet steel terminal box contains the AVR and provides ample space for the customers wiring and gland arrangements.It has removable panels for easy access.

Shaft&Keys

All generator rotors are dynamically balanced to better than BS6861:Part 1 Grade 2.5 for minimum vibration in operation. Two bearing generators are balanced with a half key.

Insulation / Impregnation

The insulation system is class 'H'

All wound components are impregnated with materials and processes designed specifically to provide the high build required for static windings and the high mechanical strength required for rotating components.

Standards

Newage Stamford industrial generators meet the requirements of **BS EN 60034** and the relevent section of other international standards such as **BS5000,VDE0530, NEMA MG1-32, IEC34, CSA C22.2-100, AS1359**

Other standards and certifications can be considered on request

Quaility Assurance

Generators are manufactured using production procedures having a quaility assurance level to BS EN ISO 9001.

Model	Standby		Prime	
	kVA	kW	kVA	kW
HCI444E	**400**	**320**	**350**	**280**

Technical Specifications

Manufacturer	NEWAGE / STAMFORD	تولید کننده
Model	HCI444E	مدل
Type	4-Poles, Rotating Field, Brushless	تیپ
Standby power at rated voltage, kVA	400	توان standby در ولتاژ نامی
Efficiency, %	%92.7	راندمان
Power factor	0.8	ضریب قدرت
Phase	3	فاز
Frequency, Hz	50	فرکانس
Speed, Rpm	1500	سرعت
Voltage, V	380/415	ولتاژ
Excitation	Self excited	سیستم تحریک
Stator windings	2/3 Pitch factor	
Regulation	AVR, Automatic Voltage Regulator	تنظیم ولتاژ
Voltage Regulator	AS440	رگولاتور ولتاژ
Voltage Regulation, %	± 1	درصد تنظیم ولتاژ
R.F.I Suppression	BS EN 61000-6-2 & BS EN 61000-6-4 VDE0875G, VDE 0875N	
Waveform distortion	No Load <1.5% Non distorting balanced linear load<5.0%	
Rotor	Dynamic balanced	روتور
Overspeed, Rpm	2250	حداکثر سرعت مجاز
Short circuit current	< 300%	جریان اتصال کوتاه
TIF	Less than 50	
Insultion class	H	کلاس عایق
Construction	Single bearing, direct coupled	نحوه کوپلینگ
Coupling	Flexible	کوپلینگ
Stator winding	Double layer concentric	
Connection	WYE	اتصال
Protection class	IP23	کلاس حفاظت
Cooling air volume,m³ / sec	0.8	دبی هوای خنک کننده

Optional Equipment

- Optional Permanent Magnet Generator (PMG) provides an isolated power supply to the excitation control system
- Anti Condensation Heaters
- Air Filters
- Temperature Indication RTD's
- Winding Protection Thermistors
- Quadrature Droop kit for Parallel Operation
- SX421 AVR with 3 Phase Sensing and improved Regulation 0.5%
- MX341 (PMG) 1% Regulation with 2 Phase Sensing
- MX321 (PMG) with 3 Phase Sensing and improved Regulation 0.5%

Control Panel

Standard Equipments

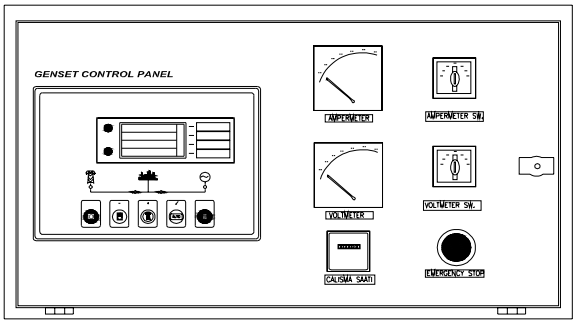

- Deeapse 5220 digital automatic control module
- Hourmeter
- Voltmeter
- Voltmeter commutator
- Ampermeter
- Ampermeter commutator
- Emergency stop button

Deepsea 5220 Control Module

Description

- The model 5220 is an Automatic Mains Failure Control module.
- The modul is used to monitor a mains supply and automaticlly start a standby generator set.
- The module also provides indication of operational status and fault conditions automaticly shutting down the genset and indicating failures by means of an LCD display, and appropriate flashing LED on the front panel.
- Selected timers and alarms can be altered by the user from the front panel.
- Alterations to the system are made using the 810 interface and a PC. This interface also provides real time diagnostic facilities

Specifications

- 240mm x 172mm dimensions
- 70mm x 40mm dimensions, 4 segment grafical LCD monitor
- Developed 16-bit Microprocessor design
- Easy comprehended display (Hid-Til-Lit SMD LED technology)
- LED mimic diagram
- SMS messaging capability with suitable GSM Modem
- PC software is MS Windows based and allows the operator to control the module from a remote location (P810 Software Kit necessary)
- Easy pushbutton controls
- System parameters can be adjusted manually from the front panel
- kVA,kW ve Cosφ measurements
- Communication with MODEM

Pushbutton Controls

STOP / START
AUTO, TEST, MANUAL
LCD PAGE

Input Functions display on LCD

Generator Volts	Volts L1-N, L2-N, L3-N
Generator Volts	Volts L1-L2, L2-L3, L3-L1
Generator Amps	Amps L1, L2, L3
Generator Frequency	Hz
Mains Volts	Volts L1-N, L2-N, L3-N
Mains Volts	Volts L1-L2, L2-L3, L3-L1
Mains Frequency	Hz
Engine Speed	RPM
Plant Battery Volts	Volts
Engine Hours Run	Hour
Generator total power	kVA L1, L2, L3,total
Generator total power	kW L1, L2, L3,total
Generator power factor	Cosφ L1, L2, L3,total

Optional Input Functions

Engine Oil pressure	kPa
Fuel level	%
Engine Temperature	°C

Alarm Channels

Under/over generator voltage
Over-current
Under/over generator frequency
Under/over speed
Charge fail
Emergency stop
Low oil pressure
High engine temperature
Fail to start
Low/high DC battery voltage
Reverse power
Generator phase rotation error
Generator short-circuit protection
Loss of speed sensing signal
Mains out of limits

Environmental Testing Standards

Electromagnetic Compatibility
BS EN 50081-2:1992 and EN 61000-6-4:2000 EMC, Emission Standards for the Industrial Environment
EN 61000-6-2:1999 EMC, Immunity Standards for the Industrial Environment
Vibration
BS EN 60068-2-6 Ten sweeps (up and back down) at 1 octave/minute in each of the three major axes.
5Hz to @ +/-7.5mm constant displacement.
8Hz to 500Hz 2gn constant acceleration.
Temperature
Cold : BS EN 60068-2-1 to -30°C
Hot : BS EN 60068-2-2 to 70°C
Humidity
BS EN 2011 part 2.1 93% RH @ 40° for 48 hours
Shock
BS EN 6068-2-27 Three half sine shocks in each of the three major axes 15gn amplitude.11mS duration.
Electrical Safety
BS EN 60950 Low Voltage Dirctive/Safety of information technology equipments, including electrical business equipment

Perkins 2300 Series Diesel Engine

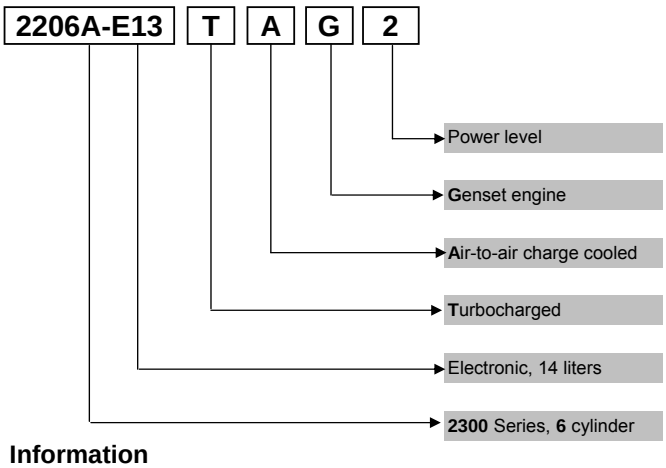

Newage/Stamford Alternator

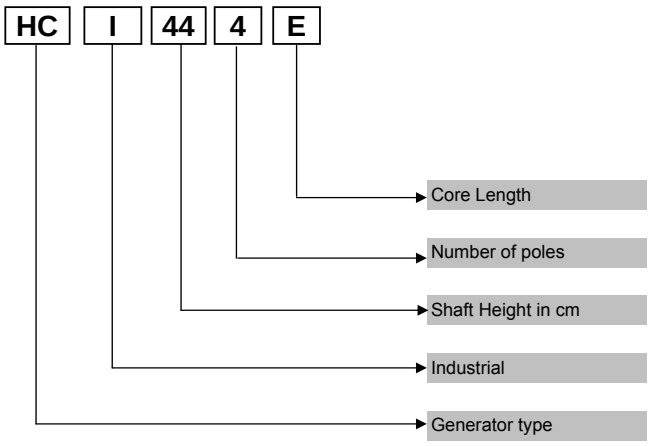

Information

Power Ratings

Standby power rating is for the supply of emergency power at variable load for the duration of the non-avalaibality of the mains power supply.No overload capacity is available at this rating.A standby rated engine should be sized for an avarage load factor of 80% based on published standby rating for 500 operating hours per year.Standby ratings should never be applied except in true emergency power failure conditions.

Prime power rating is available for unlimited hours per year with a variable load of which the average engine load factor is 80% of the published power rating, incorporation of a 10% overload for 1 hour in every 12 hours of operation which permitted

Continuous power rating is available for continuous full load operation.No overload is permitted.

Acc. to ISO 3046/1, BS 5514, DIN6271

Electric Formulas

Values	Formula	
kWe	kWm X E	
kWe	(U x I x 1.73 x pf) / 1000	kVA x pf
kVA	(U x I x 1.73) / 1000	kWe / pf
I (Amp)	(kWe x 1000) / (U x 1.73 x pf)	(kVA x 1000) / (U x 1.73)
Frequency	(Rpm x N°Pole) / (2 x 60)	
Rpm	(2 x 60 x Frequency) / N°Pole	

kWm: Mechanical Power
kWe : Electrical Power
pf : Power factor
E : Alternator efficiency
I : Current (A)
U : Voltage (V)
kVA : Power
Rpm: Revolutions per minute

General Dimensions

Standard Generator

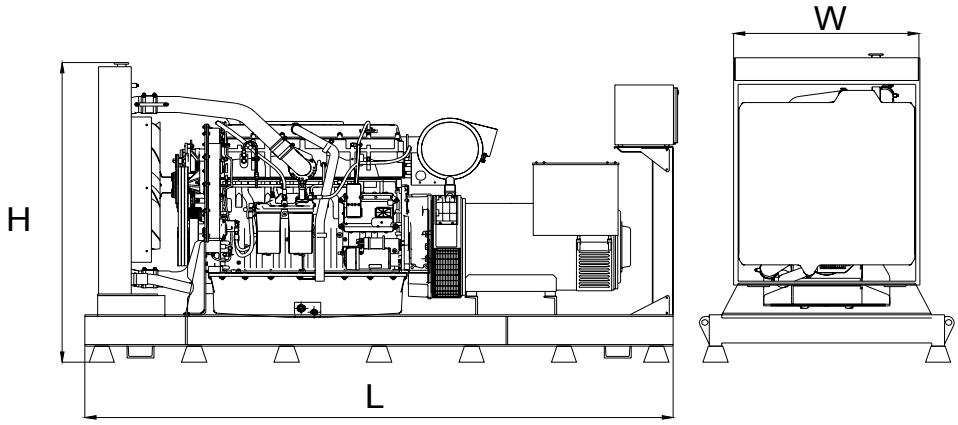

Length, L	3,5 m
Heigth, H	1,9 m
Width, W	1,1 m
Weight, Total	3450 kg

Generator with Soundproof Canopy

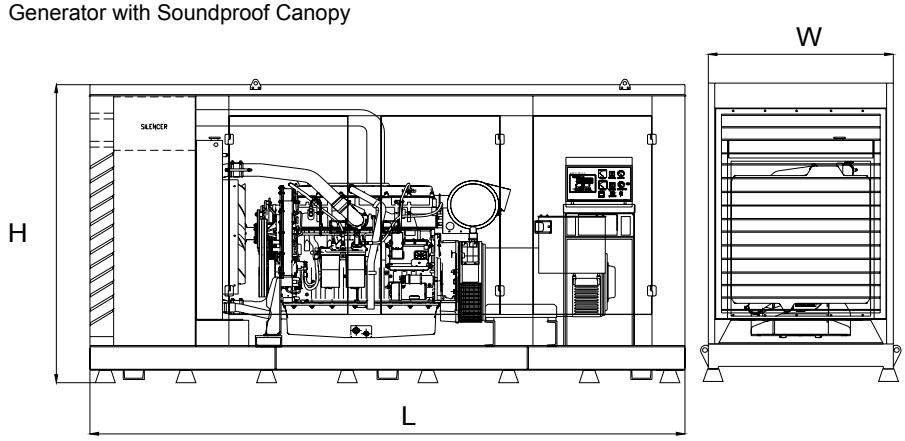

Length, L	4,5 m
Heigth, H	2,5 m
Width, W	1,4 m
Weight, Total	4850 kg
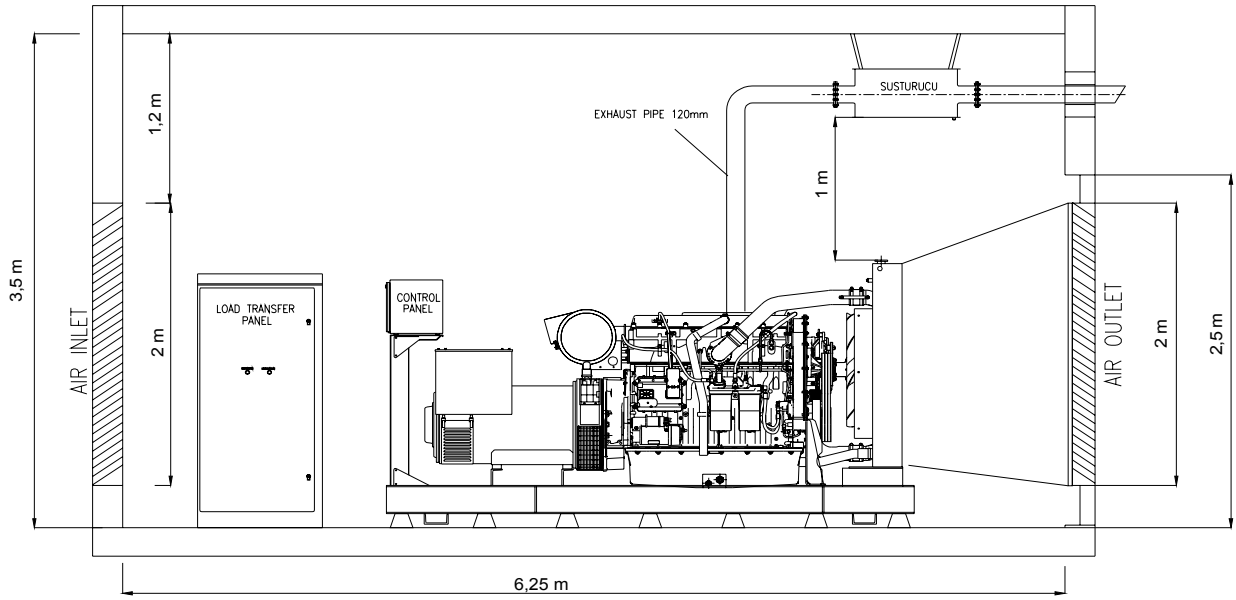
Generator Room Layout